STAINLESS STEEL 36" DROP ROD
w/ DOUBLE FLANGE BRACKET

INSTALLATION, ADJUSTMENT
AND MAINTENANCE INSTRUCTIONS

INSTALLATION

1. Mount the lower drop rod guide two (2) inches from the bottom edge of gate with the supplied screws.

2. Position the upper guide using the drop rod to align with the lower guide and lock the retaining ears (see figure 2). With the ears in the "locked" position, attach the top guide bracket to the gate so that the drop rod does not drag when gate is opened and closed.

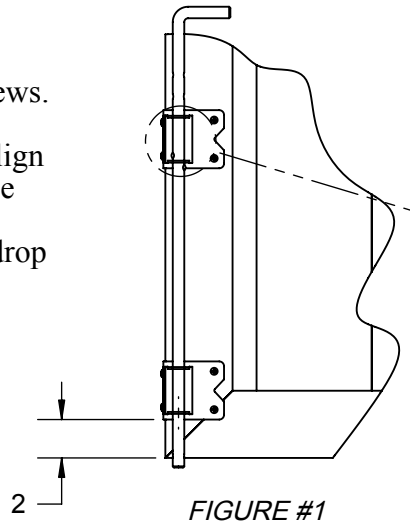

FIGURE #1

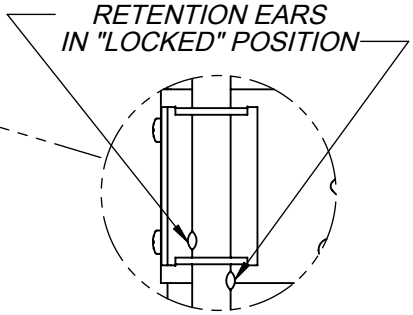

FIGURE #2

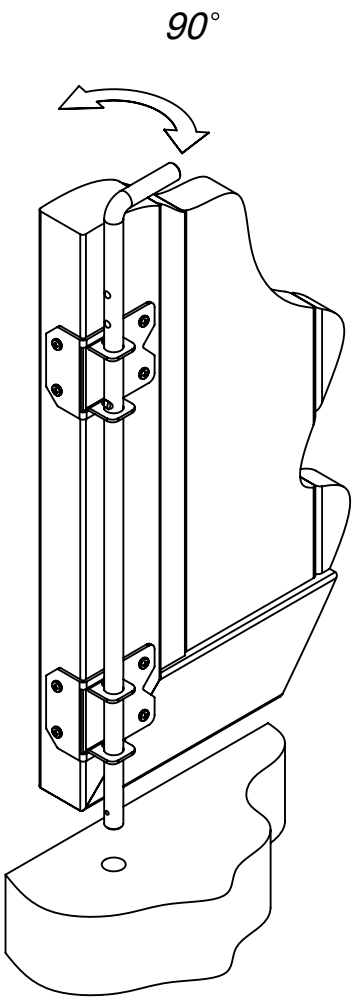

OPERATION

1. To open gate: Lift the drop rod until the upper retention ear contacts the upper guide bracket. Rotate drop rod 90° clockwise until ear passed through opening, and then back 90° counterclockwise to lock in place. See figure #2

2. To close gate: reverse step 1, and lower drop rod into the aligned hole in floor.

LOCKING THE DROP ROD

With the holes provided, the drop rod can be locked in any one of the (4) positions shown. These 4 locking positions will compensate for any variations in hole depth.

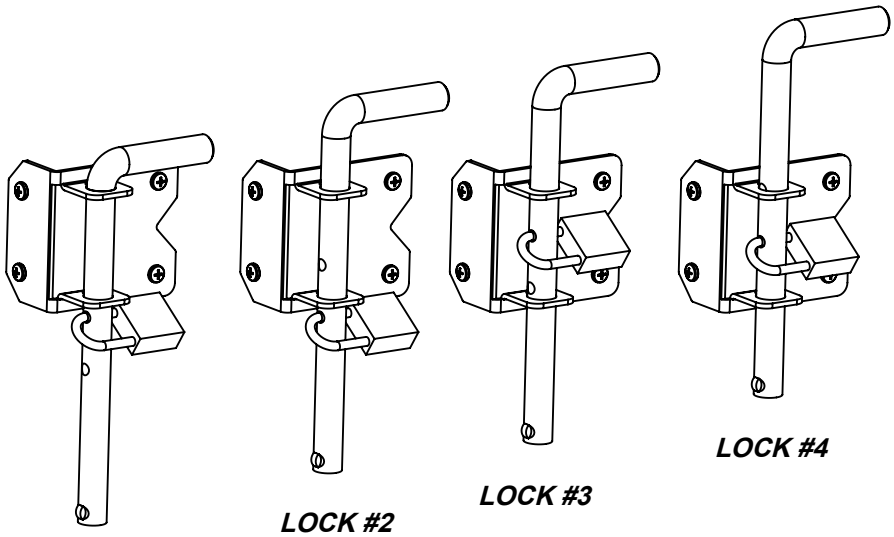

LOCK #1 ***LOCK #2*** ***LOCK #3*** ***LOCK #4***